Ningbo Feter Electrical Appliance Co., Ltd

Cold. Fast. Reliable.

Ningbo Feter Electrical Appliance Co., Ltd

Add: 78 Jingqi Road, Fuhai Industrial Zone, Cixi City, Zhejiang Province

Tel: 86-574-63564720 Fax: 86-574- 63567353

Mail: feter@feterchina. com

Web: www. feterchina. com

FETER

ICE MACHINE

Ningbo Feter Electrical Appliance Co., Ltd

Professional Commerical Ice Maker Machine Manufacturer

FETER

COMPANY PROFILE

Ningbo Feter Electrical Appliance Co., Ltd——founded in 2003, focus on cooling industry for 23 years.

Ningbo Feter Electrical Appliance Co., Ltd was founded in 2003, is a professional manufacturer and exporter of Ice Maker, Slush Machine, Water Dispenser and other appliances.

Factory has over 30,000 square meters and 200 employees, annual sales exceed 15 million dollars and export to more than 150 countries and regions around the world. Our partners include Wal-Mart, LIDL and other international companies.

We are a company who combines design, mold development, mold injection, assembling and owns professional R&D department with more than 20 people to provide OEM, ODM service for customers.

Company is a verified supplier of Alibaba and Made-in-China, which passed ISO9001 International Quality System and BSCI inspection by SGS and BV. Our products have been awarded over 200 patents and complied with international quality standards such as ETL, CE, GS, CB, PSE, FCC and other certifications.

Ningbo Feter Electrical Appliance Co., Ltd is always looking forward to sincere cooperation relationship with all of customers!

20+YEARS
Founded in 2003

3000m²
Factory Area

200+
Employees

OEM & ODM
R&D team

Certifications

Ningbo Feter Electrical Appliance Co., Ltd. focuses on product research, development, quality with advanced technology and a strong R&D team to deliver reliable and innovative solutions, it has obtained various patents and certifications.

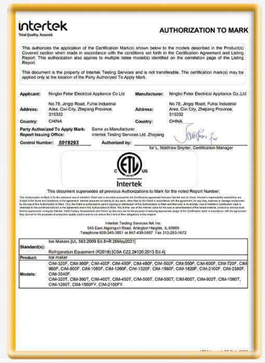

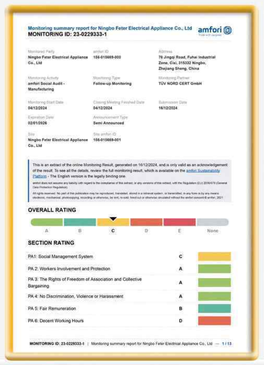

FETER

Professional commerical ice maker machine manufacturer

CONTENTS

COMPANY PROFILE 01 - 02

CERTIFICATIONS 03 - 04

CUBE ICE MAKER

Classic Model 07 - 18

Visual Door Model 19 - 22

SNOWFLAKE ICE MAKER 23 - 27

HOUSEHOLD ICE MAKER 31 - 32

FETER

CUBE ICE MACHINE

Vertical Type - Classic

Dimension Drawing/尺寸图

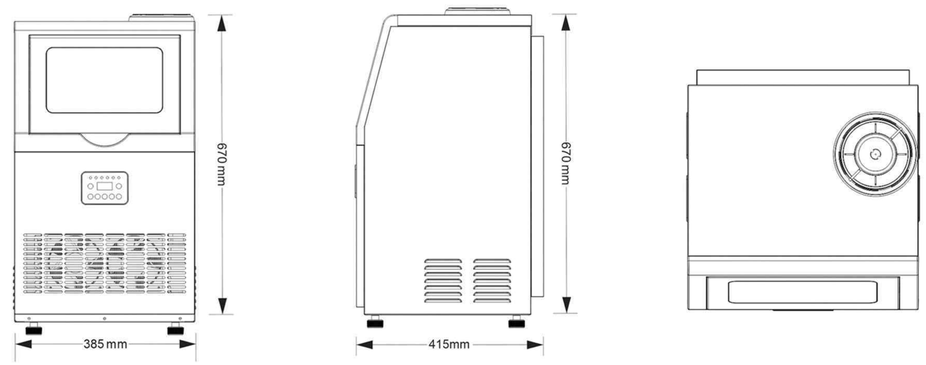

Product Parameters/产品参数

Model No./ 型号	CIM-320F	CIM-360F	CIM-400F	CIM-450F
Output 24hrs/ 日产量	60 lbs (30KG)	70 lbs (35KG)	75 lbs (38KG)	80 lbs (40KG)
Ice Storage Capacity/ 储冰量	8KG	8KG	8KG	8KG
Cooling Way/ 制冷方式	Air-Cooled/ 风冷	Air-Cooled/ 风冷	Air-Cooled/ 风冷	Air-Cooled/ 风冷
Way of Adding Water/ 进水方式	Pipe & Bottled Water/ 管道&桶装水	Pipe & Bottled Water/ 管道&桶装水	Pipe & Bottled Water/ 管道&桶装水	Pipe & Bottled Water/ 管道&桶装水
Power/ 功率	175W	175W	185W	185W
Ice Making Time/ 制冰时间	14 minutes	14 minutes	14 minutes	14 minutes
Refrigerant/ 制冷剂	R290	R290	R290	R290
G.W /N.W (KGS)/ 毛重、净重	20.2/17.8	20.2/17.8	20.2/17.8	20.2/17.8
Product Size(mm)/ 产品尺寸	385*415*670	385*415*670	385*415*670	385*415*670
Packing Size(mm)/ 包装尺寸	450*460*700	450*460*700	450*460*700	450*460*700

CUBE ICE MACHINE

Vertical Type - Classic

Dimension Drawing/尺寸图

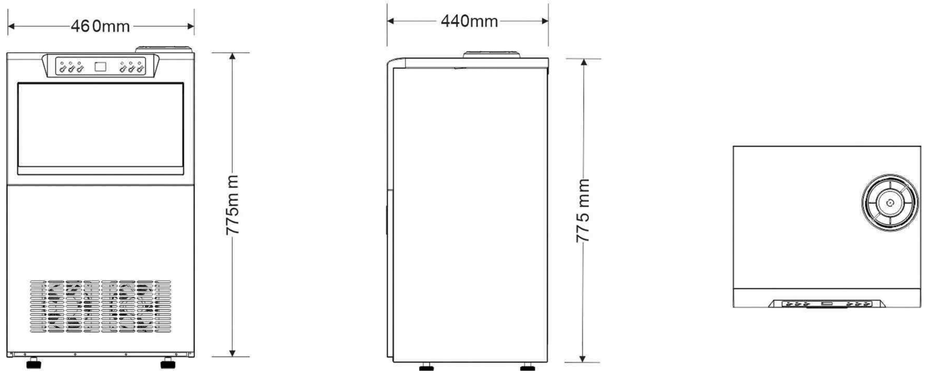

Product Parameters/产品参数

Model No./ 型号	CIM-500F	CIM-550F	CIM-600F	CIM-720F
Output 24hrs/ 日产量	90 lbs (45KG)	100 lbs (50KG)	110 lbs (55KG)	130 lbs (65KG)
Ice Storage Capacity/ 储冰量	20KG	20KG	20KG	20KG
Cooling Way/ 制冷方式	Air-Cooled/ 风冷	Air-Cooled/ 风冷	Air-Cooled/ 风冷	Air-Cooled/ 风冷
Way of Adding Water/ 进水方式	Pipe & Bottled Water/ 管道&桶装水	Pipe & Bottled Water/ 管道&桶装水	Pipe & Bottled Water/ 管道&桶装水	Pipe & Bottled Water/ 管道&桶装水
Power/ 功率	235W	235W	290W	290W
Ice Making Time/ 制冰时间	14 minutes	14 minutes	14 minutes	14 minutes
Refrigerant/ 制冷剂	R290	R290	R290	R290
G.W /N.W (KGS)/ 毛重、净重	27/23	27.3/23.4	27.3/23.4	32/28
Product Size(mm)/ 产品尺寸	460*440*775	460*440*775	460*440*775	460*440*775
Packing Size(mm)/ 包装尺寸	525*455*825	525*455*825	525*455*825	525*455*825

CUBE ICE MACHINE

Vertical Type - Classic

Dimension Drawing/尺寸图

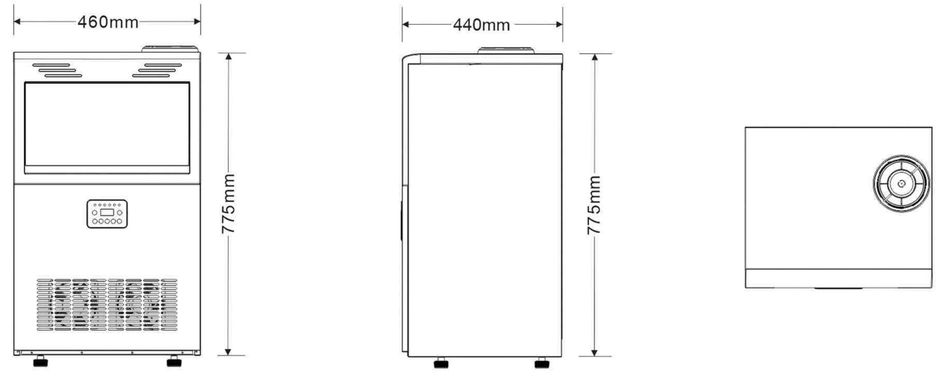

Product Parameters/产品参数

Model No./ 型号	CIM-500F	CIM-550F	CIM-600F	CIM-720F
Output 24hrs/ 日产量	90 lbs (45KG)	100 lbs (50KG)	110 lbs (55KG)	130 lbs (65KG)
Ice Storage Capacity/ 储冰量	20KG	20KG	20KG	20KG
Cooling Way/ 制冷方式	Air-Cooled/ 风冷	Air-Cooled/ 风冷	Air-Cooled/ 风冷	Air-Cooled/ 风冷
Way of Adding Water/ 进水方式	Pipe & Bottled Water/ 管道&桶装水	Pipe & Bottled Water/ 管道&桶装水	Pipe & Bottled Water/ 管道&桶装水	Pipe & Bottled Water/ 管道&桶装水
Power/ 功率	235W	235W	290W	290W
Ice Making Time/ 制冰时间	14 minutes	14 minutes	14 minutes	14 minutes
Refrigerant/ 制冷剂	R290	R290	R290	R290
G.W /N.W (KGS)/ 毛重、净重	27/23	27.3/23.4	27.3/23.4	32/28
Product Size(mm)/ 产品尺寸	460*440*775	460*440*775	460*440*775	460*440*775
Packing Size(mm)/ 包装尺寸	525*455*825	525*455*825	525*455*825	525*455*825

CUBE ICE MACHINE

Vertical Type - Classic

Dimension Drawing/尺寸图

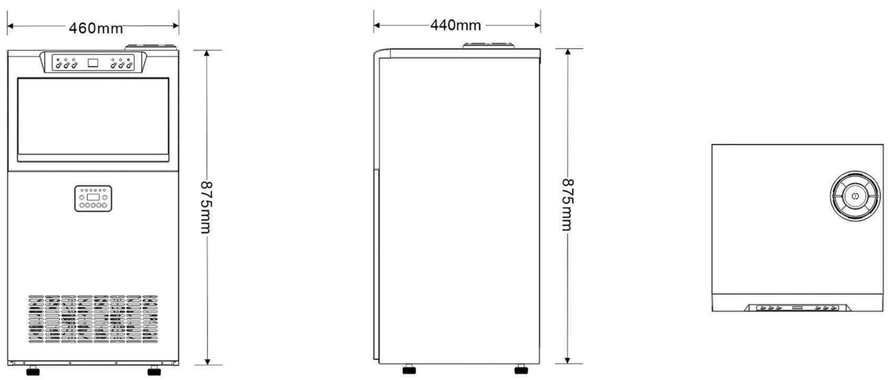

Product Parameters/产品参数

Model No./ 型号	CIM-960F
Output 24hrs/ 日产量	180 lbs (90KG)
Ice Storage Capacity/ 储冰量	25KG
Cooling Way/ 制冷方式	Air-Cooled/ 风冷
Way of Adding Water/ 进水方式	Pipe & Bottled Water/ 管道&桶装水
Power/ 功率	445W
Ice Making Time/ 制冰时间	14 minutes
Refrigerant/ 制冷剂	R290
G.W /N.W (KGS)/ 毛重、净重	35/31
Product Size(mm)/ 产品尺寸	460*440*875
Packing Size(mm)/ 包装尺寸	525*510*930

CUBE ICE MACHINE

Vertical Type - Classic

Dimension Drawing/尺寸图

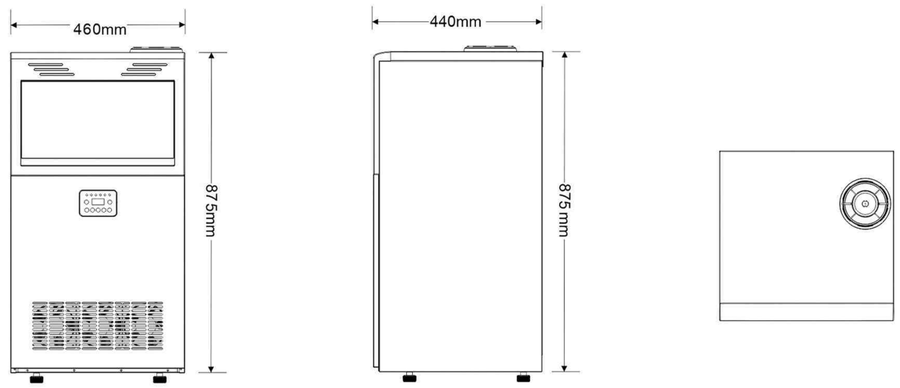

Product Parameters/产品参数

Model No./ 型号	CIM-960F
Output 24hrs/ 日产量	180 lbs (90KG)
Ice Storage Capacity/ 储冰量	25KG
Cooling Way/ 制冷方式	Air-Cooled/ 风冷
Way of Adding Water/ 进水方式	Pipe & Bottled Water/ 管道&桶装水
Power/ 功率	445W
Ice Making Time/ 制冰时间	14 minutes
Refrigerant/ 制冷剂	R290
G.W /N.W (KGS)/ 毛重、净重	35/31
Product Size(mm)/ 产品尺寸	460*440*875
Packing Size(mm)/ 包装尺寸	525*510*930

CUBE ICE MACHINE

Vertical Type - Classic

Dimension Drawing/尺寸图

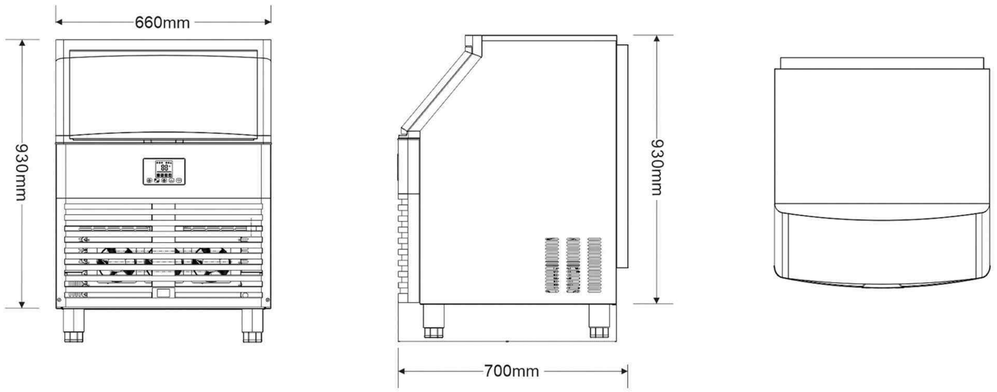

Product Parameters/产品参数

Model No./ 型号	CIM-900F	CIM-1080F	CIM-1260F
Output 24hrs/ 日产量	170 lbs (85KG)	200 lbs (100KG)	250 lbs (125KG)
Ice Storage Capacity/ 储冰量	40KG	40KG	40KG
Cooling Way/ 制冷方式	Air-Cooled/ 风冷	Air-Cooled/ 风冷	Air-Cooled/ 风冷
Way of Adding Water/ 进水方式	Pipe Water/ 管道水	Pipe Water/ 管道水	Pipe Water/ 管道水
Power/ 功率	445W	445W	515W
Ice Making Time/ 制冰时间	14 minutes	14 minutes	14 minutes
Refrigerant/ 制冷剂	R290	R290	R290
G.W /N.W (KGS)/ 毛重、净重	57/48	60/51	61/52
Product Size(mm)/ 产品尺寸	700*660*930	700*660*930	700*660*930
Packing Size(mm)/ 包装尺寸	750*720*870	750*720*870	750*720*870

CUBE ICE MACHINE

Modular Type

300P

Dimension Drawing/尺寸图

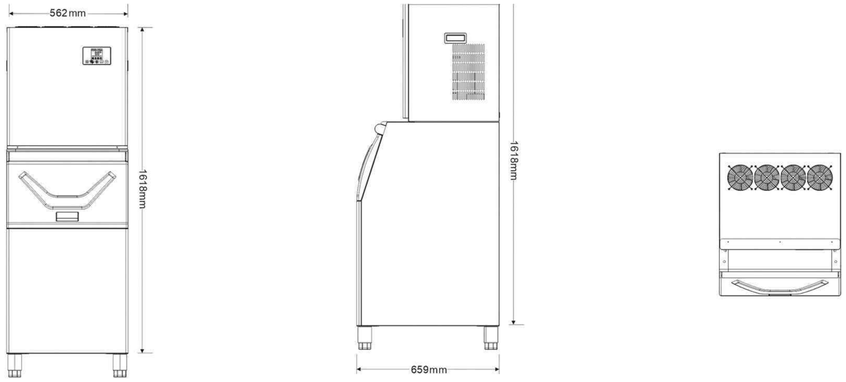

Product Parameters/产品参数

Model No./ 型号	CIM-1320F	CIM-1560F	CIM-1820F	CIM-2100F
Output 24hrs/ 日产量	260lbs/130KG	300lbs/150KG	360lbs/180KG	400lbs/200KG
Ice Storage Capacity/ 储冰量	300lbs/150KG	300lbs/150KG	300lbs/150KG	300lbs/150KG
Cooling Way/ 制冷方式	Air&Water-Cooled/ 风冷&水冷	Air&Water-Cooled/ 风冷&水冷	Air&Water-Cooled/ 风冷&水冷	Air&Water-Cooled/ 风冷&水冷
Way of Adding Water/ 进水方式	Pipe Water/ 管道水	Pipe Water/ 管道水	Pipe Water/ 管道水	Pipe Water/ 管道水
Power/ 功率	680W	680W	775W	1010W
Ice Making Time/ 制冰时间	14 minutes	14 minutes	14 minutes	14 minutes
Refrigerant/ 制冷剂	R290	R290	R290	R290
Mainframe G.W /N.W (KGS)/ 主机毛净重	37/33	38/34	39/35	40.6/36.5
Ice Bin G.W /N.W (KGS)/ 储冰桶毛净重	32/27	32/27	32/27	32/27
Product Size(mm)/ 产品尺寸	562*659*1618	562*659*1618	562*659*1618	562*659*1618
Mainframe Packing Size(mm)/ 主机包装尺寸	635*510*635	635*510*635	635*510*635	635*510*635
Ice Bin Packing Size(mm)/ 储冰桶包装尺寸	725*625*990	725*625*990	725*625*990	725*625*990

CUBE ICE MACHINE

Modular Type

300P

Dimension Drawing/尺寸图

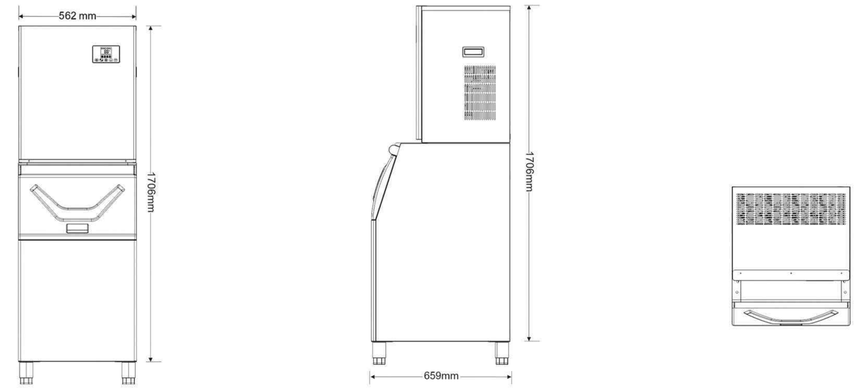

Product Parameters/产品参数

Model No./ 型号	CIM-2380F	CIM-3040F
Output 24hrs/ 日产量	450lbs/225KG	550lbs/275KG
Ice Storage Capacity/ 储冰量	300lbs/150kg	300lbs/150kg
Cooling Way/ 制冷方式	Air&Water-Cooled/ 风冷&水冷	Air&Water-Cooled/ 风冷&水冷
Way of Adding Water/ 进水方式	Pipe Water/ 管道水	Pipe Water/ 管道水
Power/ 功率	1010W	1010W
Ice Making Time/ 制冰时间	14 minutes	14 minutes
Refrigerant/ 制冷剂	R290	R290
Mainframe G.W /N.W (KGS)/ 主机毛净重	42/38	43/39
Ice Bin G.W /N.W (KGS)/ 储冰桶毛净重	32/27	32/27
Product Size(mm)/ 产品尺寸	562*659*1706	562*659*1706
Mainframe Packing Size(mm)/ 主机包装尺寸	635*510*735	635*510*735
Ice Bin Packing Size(mm)/ 储冰桶包装尺寸	725*625*990	725*625*990

CUBE ICE MACHINE

Modular Type

500P

Dimension Drawing/尺寸图

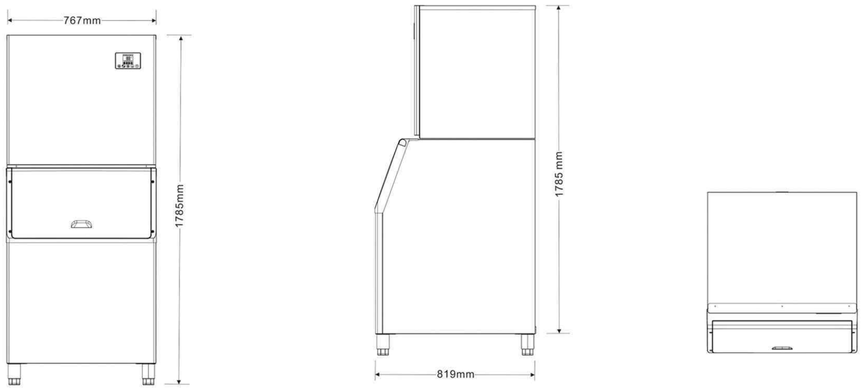

Product Parameters/产品参数

Model No./ 型号	CIM-3990F	CIM-4370F
Output 24hrs/ 日产量	1000lbs/450KG	1100lbs/500KG
Ice Storage Capacity/ 储冰量	500lbs/250KG	500lbs/250KG
Cooling Way/ 制冷方式	Water-Cooled/ 水冷	Water-Cooled/ 水冷
Way of Adding Water/ 进水方式	Pipe Water/ 管道水	Pipe Water/ 管道水
Power/ 功率	1500W	1500W
Ice Making Time/ 制冰时间	14 minutes	14 minutes
Refrigerant/ 制冷剂	R404a	R404a
Product Size(mm)/ 产品尺寸	767*819*1785	767*819*1785

CUBE ICE MACHINE

Modular Type

1000P

Dimension Drawing/尺寸图

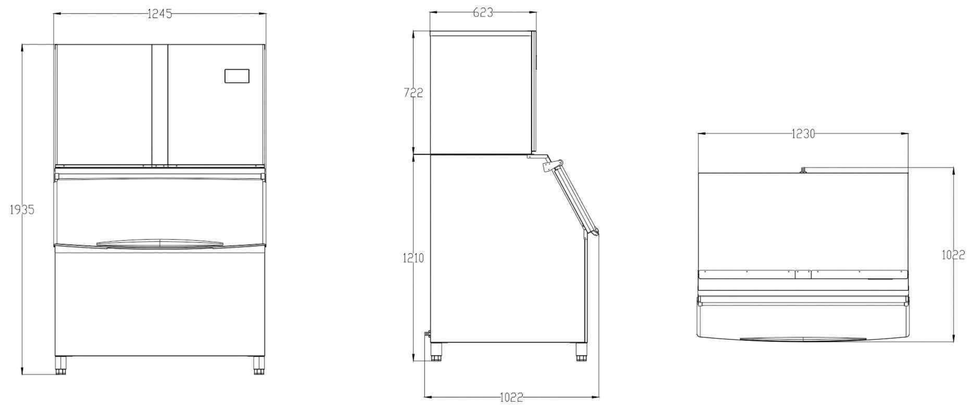

Product Parameters/产品参数

Model No./ 型号	CIM-7600F
Output 24hrs/ 日产量	1500lbs/750KG
Ice Storage Capacity/ 储冰量	1000lbs/500KG
Cooling Way/ 制冷方式	Water-Cooled/ 水冷
Way of Adding Water/ 进水方式	Pipe Water/ 管道水
Power/ 功率	3400W
Ice Making Time/ 制冰时间	14 minutes
Refrigerant/ 制冷剂	R404a
Product Size(mm)/ 产品尺寸	1245*1022*1935

CUBE ICE MACHINE

Vertical Type - Visual Door

Dimension Drawing/尺寸图

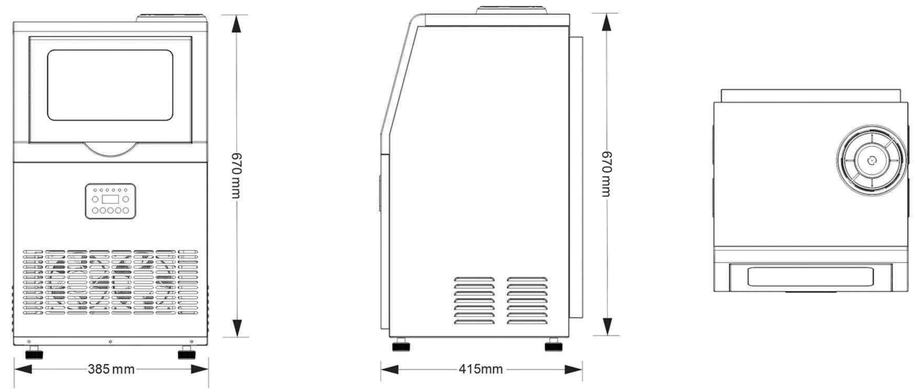

Product Parameters/产品参数

Model No./ 型号	CIM-320T	CIM-360T	CIM-400T	CIM-450T
Output 24hrs/ 日产量	60 lbs (30KG)	70 lbs (35KG)	75 lbs (38KG)	80 lbs (40KG)
Ice Storage Capacity/ 储冰量	8KG	8KG	8KG	8KG
Cooling Way/ 制冷方式	Air-Cooled/ 风冷	Air-Cooled/ 风冷	Air-Cooled/ 风冷	Air-Cooled/ 风冷
Way of Adding Water/ 进水方式	Pipe & Bottled Water/ 管道&桶装水	Pipe & Bottled Water/ 管道&桶装水	Pipe & Bottled Water/ 管道&桶装水	Pipe & Bottled Water/ 管道&桶装水
Power/ 功率	175W	175W	185W	185W
Ice Making Time/ 制冰时间	14 minutes	14 minutes	14 minutes	14 minutes
Refrigerant/ 制冷剂	R290	R290	R290	R290
G.W /N.W (KGS)/ 毛重、净重	20.2/17.8	20.2/17.8	20.2/17.8	20.2/17.8
Product Size(mm)/ 产品尺寸	385*415*670	385*415*670	385*415*670	385*415*670
Packing Size(mm)/ 包装尺寸	450*460*700	450*460*700	450*460*700	450*460*700

CUBE ICE MACHINE

Vertical Type - Visual Door

Dimension Drawing/尺寸图

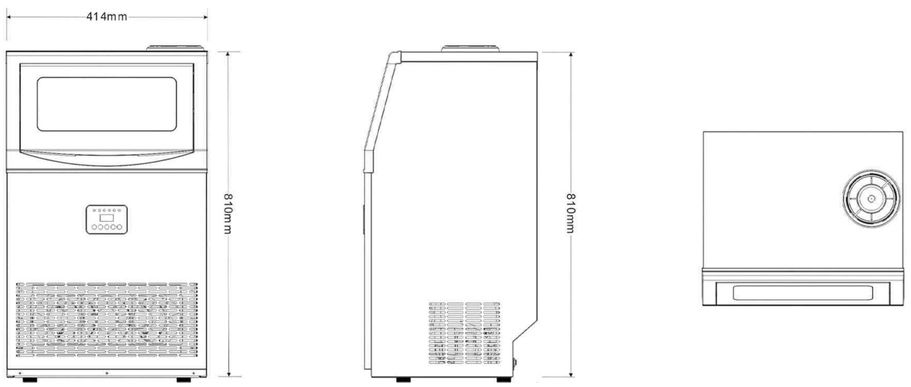

Product Parameters/产品参数

Model No./ 型号	CIM-500T	CIM-550T	CIM-600T	CIM-720T	CIM-960T
Output 24hrs/ 日产量	90 lbs (45KG)	100 lbs (50KG)	110 lbs (55KG)	130 lbs (65KG)	180 lbs (90KG)
Ice Storage Capacity/ 储冰量	21KG	21KG	21KG	21KG	21KG
Cooling Way/ 制冷方式	Air-Cooled/ 风冷	Air-Cooled/ 风冷	Air-Cooled/ 风冷	Air-Cooled/ 风冷	Air-Cooled/ 风冷
Way of Adding Water/ 进水方式	Pipe & Bottled Water/ 管道&桶装水	Pipe & Bottled Water/ 管道&桶装水	Pipe & Bottled Water/ 管道&桶装水	Pipe & Bottled Water/ 管道&桶装水	Pipe & Bottled Water/ 管道&桶装水
Power/ 功率	235W	235W	290W	290W	290W
Ice Making Time/ 制冰时间	14 minutes	14 minutes	14 minutes	14 minutes	14 minutes
Refrigerant/ 制冷剂	R290	R290	R290	R290	R290
G.W /N.W (KGS)/ 毛重、净重	27.3/23.4	29/25	29.3/25.4	32.5/28.5	34/30
Product Size(mm)/ 产品尺寸	486*414*810	486*414*810	486*414*810	486*414*810	486*414*810
Packing Size(mm)/ 包装尺寸	525*455*825	525*455*825	525*455*825	525*455*825	525*455*825

CUBE ICE MACHINE

Vertical Type - Visual Door

Dimension Drawing/尺寸图

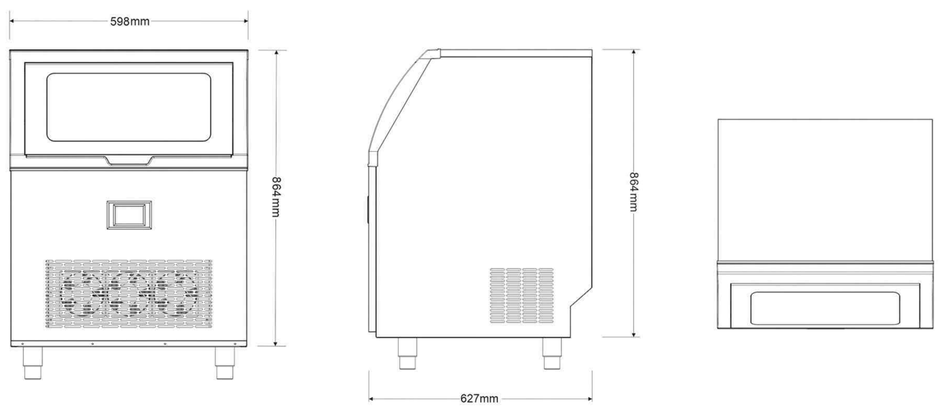

Product Parameters/产品参数

Model No./ 型号	CIM-900T	CIM-1080T	CIM-1260T
Output 24hrs/ 日产量	170 lbs (85KG)	200 lbs (100KG)	250 lbs (125KG)
Ice Storage Capacity/ 储冰量	39KG	39KG	39KG
Cooling Way/ 制冷方式	Air-Cooled/ 风冷	Air-Cooled	Air-Cooled
Way of Adding Water/ 进水方式	Pipe Water/ 管道水	Pipe Water	Pipe Water
Power/ 功率	445W	445W	515W
Ice Making Time/ 制冰时间	14 minutes	14 minutes	14 minutes
Refrigerant/ 制冷剂	R290	R290	R290
G.W /N.W (KGS)/ 毛重、净重	59/50	61/51.5	62/52.5
Product Size(mm)/ 产品尺寸	627*598*864	627*598*864	627*598*864
Packing Size(mm)/ 包装尺寸	692*667*882	692*667*882	692*667*882

SNOWFLAKE ICE MACHINE

Dimension Drawing/尺寸图

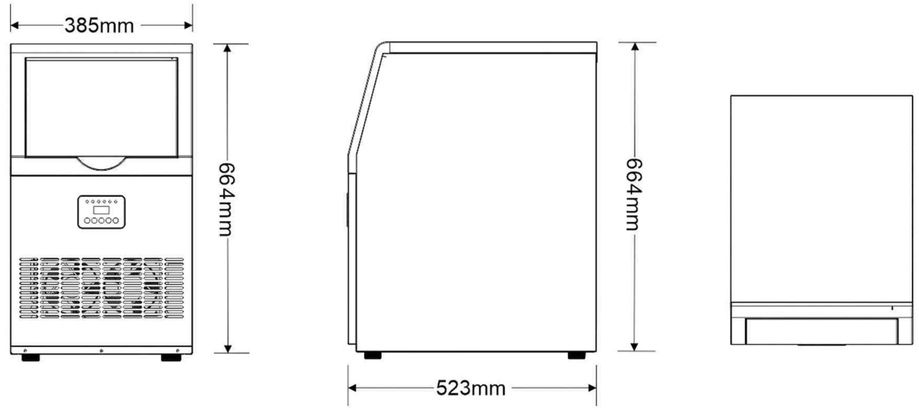

Product Parameters/产品参数

Model No./ 型号	CIM-400XH
Output 24hrs/ 日产量	50KG (day)
Ice Storage Capacity/ 储冰量	10KG
Cooling Way/ 制冷方式	Air-Cooled/ 风冷
Way of Adding Water/ 进水方式	Pipe Water/ 管道水
Power/ 功率	140W
Ice Making Time/ 制冰时间	3 minutes
Refrigerant/ 制冷剂	R290
G.W /N.W (KGS)/ 毛重、净重	24/20
Product Size(mm)/ 产品尺寸	385*523*664
Packing Size(mm)/ 包装尺寸	450*570*700

SNOWFLAKE ICE MACHINE

Dimension Drawing/尺寸图

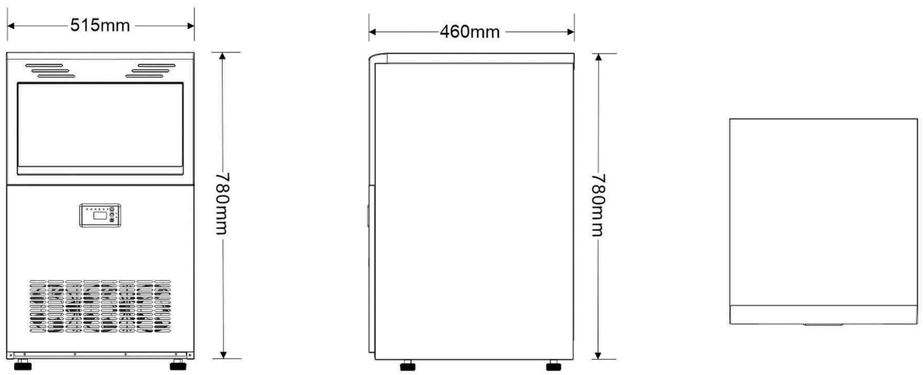

Product Parameters/产品参数

Model No./ 型号	CIM-800XH
Output 24hrs/ 日产量	100KG (day)
Ice Storage Capacity/ 储冰量	20KG
Cooling Way/ 制冷方式	Air-Cooled/ 风冷
Way of Adding Water/ 进水方式	Pipe Water/ 管道水
Power/ 功率	451W
Ice Making Time/ 制冰时间	3 minutes
Refrigerant/ 制冷剂	R290
G.W /N.W (KGS)/ 毛重、净重	49/42
Product Size(mm)/ 产品尺寸	515*460*780
Packing Size(mm)/ 包装尺寸	570*530*840

SNOWFLAKE ICE MACHINE

Dimension Drawing/尺寸图

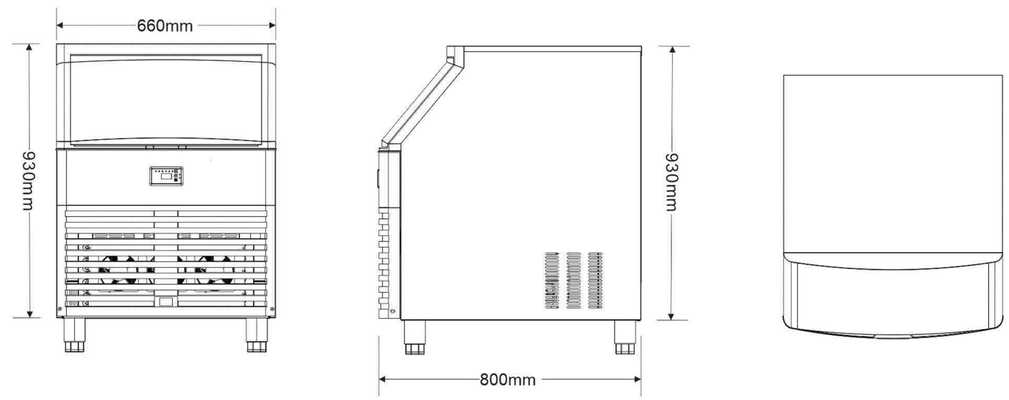

Product Parameters/产品参数

Model No./ 型号	CIM-1500XH
Output 24hrs/ 日产量	200KG (day)
Ice Storage Capacity/ 储冰量	40KG
Cooling Way/ 制冷方式	Air-Cooled/ 风冷
Way of Adding Water/ 进水方式	Pipe Water/ 管道水
Power/ 功率	615W
Ice Making Time/ 制冰时间	3 minutes
Refrigerant/ 制冷剂	R290
G.W /N.W (KGS)/ 毛重、净重	65/58
Product Size(mm)/ 产品尺寸	660*800*930
Packing Size(mm)/ 包装尺寸	720*870*870

SNOWFLAKE ICE MACHINE

Dimension Drawing/尺寸图

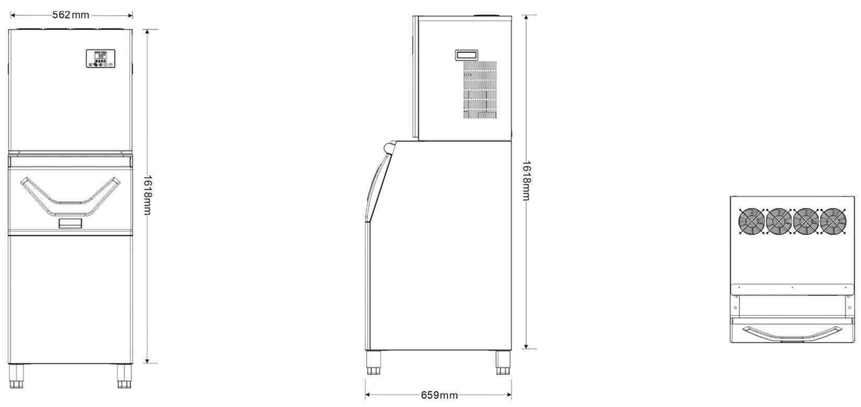

Product Parameters/产品参数

Model No./ 型号	CIM-2000XH
Output 24hrs/ 日产量	300KG (day)
Ice Storage Capacity/ 储冰量	75KG
Cooling Way/ 制冷方式	Water Cooled/ 水冷
Way of Adding Water/ 进水方式	Pipe Water/ 管道水
Power/ 功率	960W
Ice Making Time/ 制冰时间	3 minutes
Refrigerant/ 制冷剂	R22
Mainframe G.W /N.W (KGS)/ 主机毛净重	54/50
Ice Bin G.W /N.W (KGS)/ 储冰桶毛净重	32/27
Product Size(mm)/ 产品尺寸	562*659*1618
Mainframe Packing Size(mm)/ 主机包装尺寸	635*510*635
Ice Bin Packing Size(mm)/ 储冰桶包装尺寸	725*625*990

SUMMARY TABLE

Vertical Type - Classic

Model No.	Output/24hrs	Ice Storage	Power	Water Inlet Method	Cooling Way	Refrigerant	Product Size
CIM-320F	30kg/60lbs	8kg/16lbs	175W	Pipe & Bottle Water	Air-Cooled	R290	385*415*670
CIM-360F	35kg/70lbs	8kg/16lbs	175W	Pipe & Bottle Water	Air-Cooled	R290	385*415*670
CIM-400F	38kg/75lbs	8kg/16lbs	185W	Pipe & Bottle Water	Air-Cooled	R290	385*415*670
CIM-450F	40kg/80lbs	8kg/16lbs	185W	Pipe & Bottle Water	Air-Cooled	R290	385*415*670
CIM-500F	45kg/90lbs	20kg/40lbs	235W	Pipe & Bottle Water	Air-Cooled	R290	460*440*775
CIM-550F	50kg/100lbs	20kg/40lbs	235W	Pipe & Bottle Water	Air-Cooled	R290	460*440*775
CIM-600F	55kg/110lbs	20kg/40lbs	325w	Pipe & Bottle Water	Air-Cooled	R290	460*440*775
CIM-720F	65kg/130lbs	20kg/40lbs	325w	Pipe & Bottle Water	Air-Cooled	R290	460*440*775
CIM-960F	90kg/180lbs	25kg/50lbs	445w	Pipe & Bottle Water	Air-Cooled	R290	460*440*875
CIM-900F	85kg/170lbs	40kg/80lbs	445w	Pipe Water	Air-Cooled	R290	460*450*875
CIM-1080F	100kg/200lbs	40kg/80lbs	445W	Pipe Water	Air-Cooled	R290	700*660*930
CIM-1260F	125kg/250lbs	40kg/80lbs	515W	Pipe Water	Air-Cooled	R290	700*660*930

Vertical Type - Visual Door

Model No.	Output/24hrs	Ice Storage	Power	Water Inlet Method	Cooling Way	Refrigerant	Product Size
CIM-320T	30kg/60lbs	8kg	175W	Pipe & Bottle Water	Air-Cooled	R290	385*415*670
CIM-360T	35kg/70lbs	8kg	175W	Pipe & Bottle Water	Air-Cooled	R290	385*415*670
CIM-400T	38kg/75lbs	8kg	185W	Pipe & Bottle Water	Air-Cooled	R290	385*415*670
CIM-450T	40kg/80lbs	8kg	185W	Pipe & Bottle Water	Air-Cooled	R290	385*415*670
CIM-500T	45kg/90lbs	21kg	235W	Pipe & Bottle Water	Air-Cooled	R290	486*414*810
CIM-550T	50kg/100lbs	21kg	235W	Pipe & Bottle Water	Air-Cooled	R290	486*414*810
CIM-600T	55kg/110lbs	21kg	290w	Pipe & Bottle Water	Air-Cooled	R290	486*414*810
CIM-720T	65kg/130lbs	21kg	290w	Pipe & Bottle Water	Air-Cooled	R290	486*414*810
CIM-960T	90kg/180lbs	21kg	445w	Pipe & Bottle Water	Air-Cooled	R290	486*414*810
CIM-900T	85kg/170lbs	39kg	445w	Pipe Water	Air-Cooled	R290	598*627*864
CIM-1080T	100kg/200lbs	39kg	445W	Pipe Water	Air-Cooled	R290	598*627*864
CIM-1260T	125kg/250lbs	39kg	515W	Pipe Water	Air-Cooled	R290	598*627*864

Modular Type

Model No.	Output/24hrs	Ice Storage	Power	Water Inlet Method	Cooling Way	Refrigerant	Product Size
CIM-1320F	130kg/260lbs	150kg/300lbs	680W	Pipe Water	Air/Water-Cooled	R290	567*819*1594
CIM-1560F	150kg/300lbs	150kg/300lbs	680W	Pipe Water	Air/Water-Cooled	R290	567*819*1594
CIM-1820F	180kg/360lbs	150kg/300lbs	775W	Pipe Water	Air/Water-Cooled	R290	567*819*1594
CIM-2100F	200kg/400lbs	150kg/300lbs	1010W	Pipe Water	Air/Water-Cooled	R290	567*819*1594
CIM-2380F	225kg/450lbs	150kg/300lbs	1010W	Pipe Water	Air/Water-Cooled	R290	562*659*1706
CIM-3040F	275kg/550lbs	150kg/300lbs	1010W	Pipe Water	Air/Water-Cooled	R290	562*659*1706
CIM-3990F	450kg/900lbs	250kg/500lbs	1500W	Pipe Water	Water-Cooled	R404a	767*819*1785
CIM-4370F	500kg/1000lbs	250kg/500lbs	1500W	Pipe Water	Water-Cooled	R404a	767*819*1785
CIM-7600F	750kg/1500lbs	500kg/1000lbs	3400W	Pipe Water	Water-Cooled	R404a	1230*1022*1935

Snowflake Ice Machine

Model No.	Output/24hrs	Ice Storage	Power	Water Inlet Method	Cooling Way	Refrigerant	Product Size
CIM-400XH	50kg/100lbs	10kg/20lbs	140W	Pipe Water	Air-Cooled	R290	385*523*664
CIM-800XH	100kg/200lbs	20kg/40lbs	451W	Pipe Water	Air-Cooled	R290	515*460*780
CIM-1500XH	200kg/400lbs	40kg/80lbs	615W	Pipe Water	Air-Cooled	R290	660*800*930
CIM-2000XH	300kg/600lbs	75kg/150lbs	960W	Pipe Water	Water-Cooled	R22	562*659*1175

半冰/HALF CUBE ICE

Half Cube

Half Dice

Product Parameters/产品参数

Model No. / 型号	CIM-1740HF
Output 24hrs/ 日产量	100KG/200 1bs
Ice Storage Capacity/ 储冰量	39KG/40 1bs
Cooling Way/ 制冷方式	Air-Cooled/ 风冷
Way of Adding Water/ 进水方式	Pipe Water/ 管道水
Power/ 功率	445W
Ice Making Time/ 制冰时间	3 minutes
Refrigerant/ 制冷剂	R290
G.W/N. W (KGS)/ 毛重、净重	61/51.5
Product Size(mm)/ 产品尺寸	627*598*864
Packing Size(mm)/ 包装尺寸	692*667*882

Dimension Drawing/尺寸图

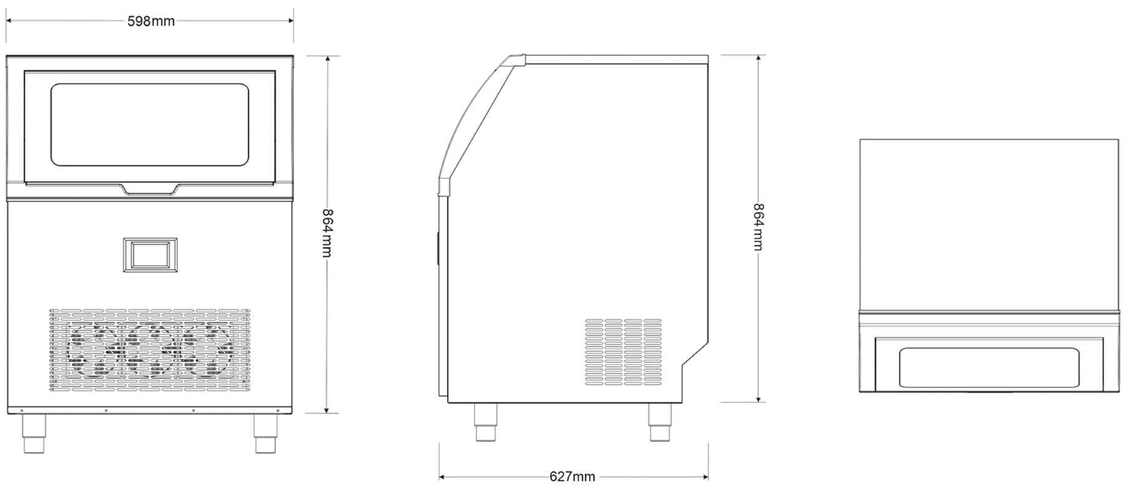

咀嚼冰/NUGGET ICE

Nugget

Pearl Shape

Product Parameters/产品参数

Model No. / 型号	CIM-1000J
Output 24hrs/ 日产量	100KG/220 1bs
Ice Storage Capacity/ 储冰量	20KG/40 1bs
Cooling Way/ 制冷方式	Air-Cooled/ 风冷
Way of Adding Water/ 进水方式	Pipe Water/ 管道水
Power/ 功率	451W
Ice Making Time/ 制冰时间	3 minutes
Refrigerant/ 制冷剂	R290
G.W/N. W (KGS)/ 毛重、净重	49/42
Product Size(mm)/ 产品尺寸	515*460*780
Packing Size(mm)/ 包装尺寸	570*530*840

Dimension Drawing/尺寸图

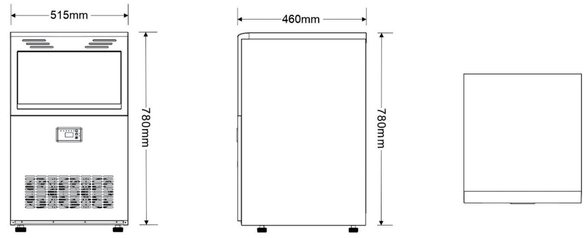

月牙冰/CRESCENT ICE

Crescent

Half Moon Shape

Product Parameters/产品参数

Model No. / 型号	CIM-640M
Output 24hrs/ 日产量	50KG/100 1bs
Ice Storage Capacity/ 储冰量	20KG/40 1bs
Cooling Way/ 制冷方式	Air-Cooled/ 风冷
Way of Adding Water/ 进水方式	Pipe Water/ 管道水
Power/ 功率	425W
Ice Making Time/ 制冰时间	3 minutes
Refrigerant/ 制冷剂	R290
G.W/N. W (KGS)/ 毛重、净重	32.3/28.4
Product Size(mm)/ 产品尺寸	486*414*810
Packing Size(mm)/ 包装尺寸	540*480*860

Dimension Drawing/尺寸图

Product Parameters/产品参数

Model No./ 型号	CIM-240F
Output 24hrs/ 日产量	18KG (day)
Ice Storage Capacity/ 储冰量	2KG
Cooling Way/ 制冷方式	Air-Cooled/ 风冷
Way of Adding Water/ 进水方式	Manual & Pipe water/ 手动加水&管道水
Power/ 功率	140W
Ice Making Time/ 制冰时间	10 minutes
Refrigerant/ 制冷剂	R600a
G.W /N.W (KGS)/ 毛重、净重	14/12
Product Size(mm)/ 产品尺寸	370*290*360
Packing Size(mm)/ 包装尺寸	420*340*400

Product Parameters/产品参数

Model No./ 型号	CIM-90B
Output 24hrs/ 日产量	15KG (day)
Ice Storage Capacity/ 储冰量	2KG
Cooling Way/ 制冷方式	Air-Cooled/ 风冷
Way of Adding Water/ 进水方式	Manual Water Filling/ 手动加水
Power/ 功率	100W
Ice Making Time/ 制冰时间	8 minutes
Refrigerant/ 制冷剂	R600a
G.W /N.W (KGS)/ 毛重、净重	9/8
Product Size(mm)/ 产品尺寸	250*280*315
Packing Size(mm)/ 包装尺寸	330*340*360